NCK-RAPIER

Eiger C110

Specification and Technical Data

Crawler mounted Liftcrane

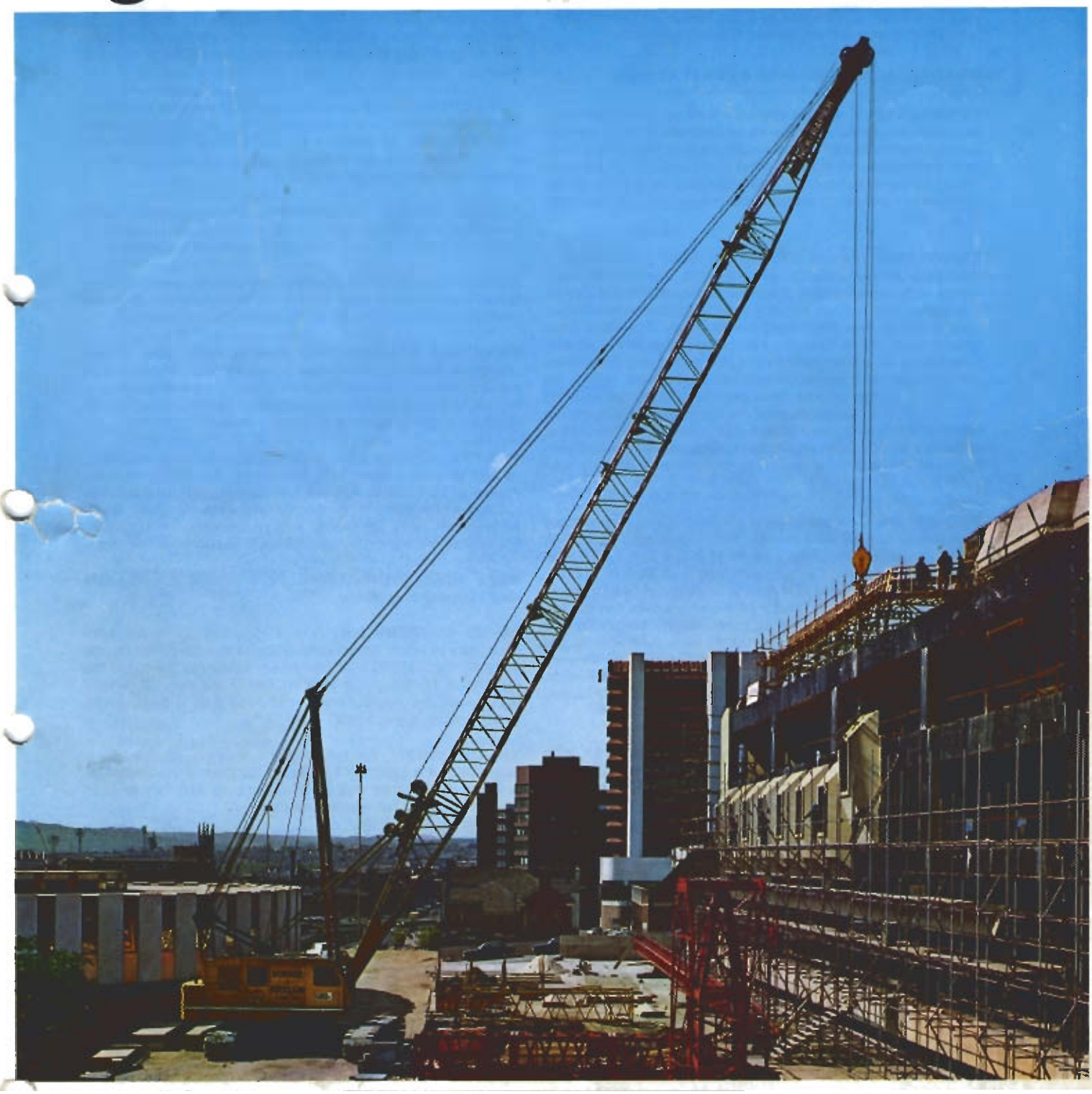

Delden CSE Ltd

Cranes, Spares & Engineering

111 Station Road,
Selston,
Nottinghamshire
NG16 6FF
England

Tel: +44 (0)1773 810432
Fax: +44 (0)1773 580483
Email: info@delden-cse.com
Web: www.delden-cse.com

November 1977 Printed in England Publication No. C110/4A

NCK-RAPIER Eiger C110 Crawler Crane

Specification

POWER: Diesel engine developing 288 b.h.p. nett at 2,000 r.p.m. full load speed, fully equipped driving through a single stage torque converter. 24 volt electric starting equipment is standard with tropical radiator and all ancillary equipment. A foot accelerator is provided and the torque converter incorporates an overspeed device and tailshaft governor.

GRADES: Machine will climb a 25% (1:4) grade.

TURNTABLE: A welded structure built up from steel castings and structural steel. The sidestands and bearings which support the horizontal shafts are an integral part of the turntable fabrication. All the horizontal and vertical shaft bearings are jig bored and remain in true alignment for the life of the machine. Revolving on six turntable rollers with six adjustable hook rollers.

CRAWLERS: The cast steel smooth faced totally enclosed crawler shoes are available in two widths. The NCK-RAPIER design of the crawler drive automatically sheds dirt and stones. The heavy cast welded carbody is secured to the two forged steel axles by four alloy steel corner studs. The axles have circular ends which fit in the circular housings in the crawler side frames to ensure easy removal. The crawler sideframes are equipped with lower traction drive sprockets, which are connected to the crawler drive countershaft in the carbody on splines. The design permits the removal of the complete crawler sideframes from the axles without disconnecting either the crawler drive chains or crawler belt. Stripping down for transport is simple involving the removal of only four securing bolts.

BOOMS: The standard boom is pin jointed and incorporates high tensile tubular steel chords. The basic length of 18·3 m (*60ft*) can be extended by 3·05 m (*10ft*), 6·1 m (*20ft*) and 9·1 m (*30ft*) inserts to a maximum length of 64·0 m (*210ft*). The boom point is fitted with four large diameter head sheaves mounted on anti-friction bearings which permits reeving the load block with 3 or 4 part lines. For loads requiring more falls of rope a sheave block is attached to pendulum links at the boom point. This eliminates the necessity for multiple sheaves at the boom point. Up to 12·2 m (*40ft*) fly jib can be fitted on main booms up to 58·0 m (*190ft*). A 18·3 m (*60ft*) fly jib can be fitted on main booms up to 54·8 m (*180ft*).

STEERING: Air controlled by means of two levers with finger tip control. Can turn right or left while travelling forward or backwards. Wear on parts and losses of power due to friction are at a minimum. Can readily steer on a slope as well as on level.

OPERATION: Air control valves for main and auxiliary operations are mounted on a centralised console. The console is designed for maximum operator efficiency giving improved visibility and with valves arranged to minimise the amount of hand movements. Controls include, swing, hoist, forward/reverse travel clutches. All engine instruments are also mounted on the console. Boom hoist brake and boom hoist pawl are mechanically operated. Main drum brakes are mechanically operated—with air assistance. Operators cab is sound insulated and isolated from the machinery compartment by a dividing door.

CLUTCHES: Main drum and boom hoist clutches are inside band type. Swing and traction clutches are 2-shoe internal expanding type. All clutches are air operated, equipped with air chambers and quick-release valves to ensure positive engagement and release of clutch.

POWER BOOM LOWERING: An automatic self-energising internal expanding clutch controls the lowering of the boom by the engine power and is standard equipment.

POWER LOAD LOWERING: Two independent planetary type clutch units to give power controlled lowering of the main load hook and fly jib hook are standard equipment.

TRACTION BRAKES: Two external contracting friction brakes are provided, one for each crawler. The traction brakes are provided with a safety feature which permits the brake to be applied without disengaging the steering jaw clutch. Brakes are spring set with air power release.

SHAFTS: All shafts are of large diameter and made from high carbon or alloy steels, heat treated for maximum strength. Power is transmitted through accurately machined involute splines, which combine highly efficient operation with quick replacement of worn parts, with a consequent saving in fitting time. All high-speed shafts run on ball or roller bearings.

SAFE LOAD INDICATORS: An audible and visible safe load indicator is available.

BOOM SUSPENSION: A rear mounted 'A' frame with mast type pendant boom suspension is standard. For booms up to 45·7 m (*150ft*) a 14 part boom hoist rope is used to the mast head. For booms of 49·8 m (*160ft*) and over 12 parts of boom hoist are reeved to the mast head with 2 parts reeved to the centre of the boom.

THIRD DRUM: An independent auxiliary third drum is available and is mounted forward of the main drum shaft. This unit can not be fitted on a machine required with Power-Load Lowering on the left-hand hoist drum.

COUNTERWEIGHT: Two piece externally mounted cast iron counterweight is ledge mounted and furnished complete with lifting bolt and sling for removal and replacement with the aid of the rear gantry.

Drum Lagging capacities

Location	Application	Diameter		Width		Type	Effective Capacity 1st Layer		Maximum Effective Capacity to BSS 1757		No. of Layers	Rope Size Diameter
		mm	*in*	mm	*in*		*m*	*ft*	m	*ft*		mm
R.H.	*Crane Main Hoist (PLL)	698	*27½*	363	*14½*	Grooved	20·7	*68*	134·1	*440*	5	30
L.H.	*Crane Fly Jib Hoist (PLL)	698	*27½*	203	*8*	Grooved	7·9	*26*	74·7	*245*	5	30
R.H.	†Crane Main Hoist (PLL)	672	*26½*	372	*14⅝*	Grooved	21·1	*69*	178	*583*	6	28
L.H.	†Crane Fly Jib Hoist (PLL)	720	*28½*	193	*7⅝*	Grooved	9·0	*29*	116	*295*	6	28
R.H.	*Crane Main Hoist (No PLL)	762	*30*	496	*19½*	Grooved	30·5	*100*	157·9	*518*	4	30
L.H.	*Crane Fly Jib Hoist (No PLL)	762	*30*	343	*13½*	Grooved	19·8	*65*	107·9	*354*	4	30
—	Boom Hoist	300	*11 11/16*	305	*12*	Grooved	11·3	*37*	137·2	*450*	7	20
—	Third Drum	419	*16½*	232	*9⅛*	Grooved	12·8	*42*	47·5	*156*	3	19

*For BSS 1757 ratings. †For 75% ratings.

Delden CSE Ltd. 111 Station Road, Selston, Notts. NG16 6FF England
Tel: +44 (0)1773 810432 Fax: +44 (0)1773 580483 Email: info@delden-cse.com Website: www.delden-cse.com

NCK-RAPIER Eiger C110 Crawler Crane

Crawler Data

Item	Distance C. to C. Tumblers			Width Frame C. to C. Girders			Length Over Crawlers			Width Over Crawlers			Width of Shoe		Pitch		No. of Shoes	Flat Bearing Surface	
	m	ft	in	m	ft	in	m	ft	in	m	ft	in	m	in	m	in		sq m	sq ft
1	5·74	18	10	5·54	18	2	6·86	22	6	6·59	21	8	1·07	42	0·3	12	96	12·5	135
2	5·74	18	10	5·54	18	2	6·86	22	6	6·74	22	2	1·22	48	0·3	12	96	14·3	154

GENERAL DATA

Tailradius (no outside weight)	4·46 m	14ft 8in
Tailradius	5·18 m	17ft 0in
Height over "A" frame	5·72 m	18ft 9in
Tailradius "A" frame	4·85 m	15ft 11in
Ground clearance	0·311 m	1ft 0¼in
Centre of Rotation to Centre of Boom foot	1·30 m	4ft 3in
Height of Boom foot from ground	2·34 m	7ft 8in
Width of Cab (maximum)	3·33 m	10ft 11in
Length of Cab (maximum)	5·87 m	19ft 3in
Height of Cab inside (max.)	2·31 m	7ft 7in
Travel Speed	0·98 km/hr	0·61 mph
Rotating Speed	2·44 rpm	2·44 rpm
Counterweight	30 500 kg	67,200 lb
Fuel Tank Capacity	815 litres	180 gallons
Radiator Capacity	95 litres	21 gallons

CLUTCHES

Main Drum	1219 × 178 mm	48in × 7in
Swing and Traction	965 × 203 mm	38in × 8in
Boom Hoist	508 × 76 mm	20in × 3in
Power Boom Lowering	508 × 76 mm	20in × 3in

All Internal Expanding Type.

BRAKES

Main Drum	1422 × 152 mm	56in × 6in
Boom Hoist	543 × 76 mm	21⅜in × 3in
Swing	914 × 102 mm	36in × 4in
Traction	711 × 89 mm	28in × 3½in
Power Load Lowering	762 × 127 mm	30in × 5in

All External Contracting Type.

WEIGHT

Complete Crane, 1·07 m (42in) shoes and 18·3 m (60ft) Boom Maximum hook	115 000 kg	253,925 lb

LIFTCRANE

Capacities and Boom lengths, refer to chart.

Main Hoist and Fly Jib Hoist with Planetary Power Load Lowering on both drums:

Hoist Rope Speed (Single part rope)	20·4 m/min	160·8ft/min
Hoist Rope Pull (Single part rope)	20 650 kg	45,500 lb
	42 000 kg at stall	92,800 lb at stall
Lowering Speed (Single part rope)	9·7 m/min	31·7ft/min
Hoist Drum	698 mm P.C.D.	27½in P.C.D.
Boom Point Sheaves	762 mm P.C.D.	30in P.C.D.

Main Hoist and Fly Jib Hoist with Gravity Load Lowering on both drums:

Hoist Rope Speed (Single part rope)	53·4 m/min	175ft/min
Hoist Rope Pull (Single part rope)	19 000 kg	41,700 lb
	38 600 kg at stall	85,000 lb at stal
Hoist Drum	762 mm P.C.D.	30in P.C.D.

Weight of Hooks:

110 000 kg (108 tons)	2 000 kg	4,430 lb
81 300 kg (70 tons)	1 573 kg	3,470 lb
55 880 kg (55 tons)	880 kg	1,950 lb
30 480 kg (30 tons)	680 kg	1,500 lb
20 320 kg (20 tons)	540 kg	1,200 lb
13 208 kg (13 tons)	223 kg	470 lb
Pendant Boom Suspension Ropes	38 mm diam.	1½in diam.

Liftcrane Hoist Rope Loads

Rope Diameter	Breaking Strain		
30 mm	60 tons	60 960 kg	134,400 lb
28 mm	43·4 tons	44 096 kg	101,623 lb

No. of parts of rope	Maximum Lifting Capacity		
	tons	lb	kg
1	13·1	29,340	13 310
2	25·8	57·790	36 210
3	38·4	86,020	39 010
4	50·8	113,790	51 630
5	63·7	142,690	64 720
6	74·5	166,870	75 690
7	86·5	193,760	87 880
8	97·5	218,600	99 060
9	108·03	242,000	109 770

These capacities are within:

1. Rope factors of safety to British Standard 1757:1964 Class 2 for the 30 mm rope.
2. Rope factors of safety of 3·5:1 U.S.A. Standard ANSI B30.5:1968 on the 28 mm rope for 75% rating.
3. Drum and machinery load limits.

NCK-RAPIER Eiger C110

Crawler Crane

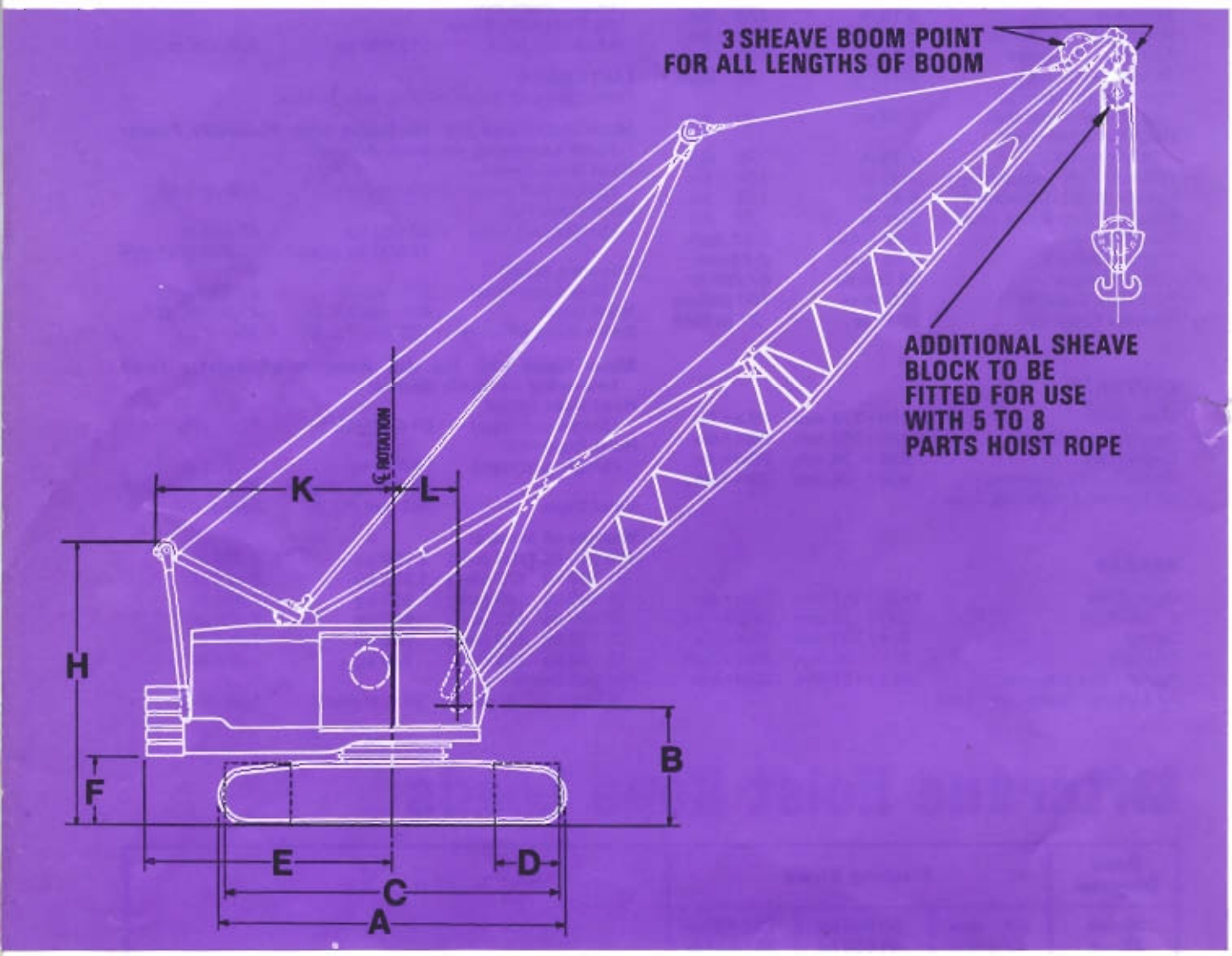

		m	ft	in
A	Overall length Standard Crawlers	6·86	22	6
B	Boom Foot centre above Ground	2·34	7	8
C	Overall width—Crawlers with 1·07 m (*42in*) Shoes	6·59	21	8
	Overall width—Crawlers with 1·22 m (*48in*) Shoes	6·74	22	2
D	Width of Shoes	1·07	3	6
	Width of Shoes	1·22	4	0
E	Tail radius over counterweight	5·18	17	0
F	Clearance under counterweight	1·35	4	5
H	Height of 'A' Frame	5·72	18	9
K	Tail radius over 'A' Frame	4·85	15	11
L	Distance CL Boom Foot to CL Rotation	1·29	4	3

Delden CSE Ltd. 111 Station Road, Selston, Notts. NG16 6FF England
Tel: +44 (0)1773 810432 Fax: +44 (0)1773 580483 Email: info@delden-cse.com Website: www.delden-cse.com

Radius diagram

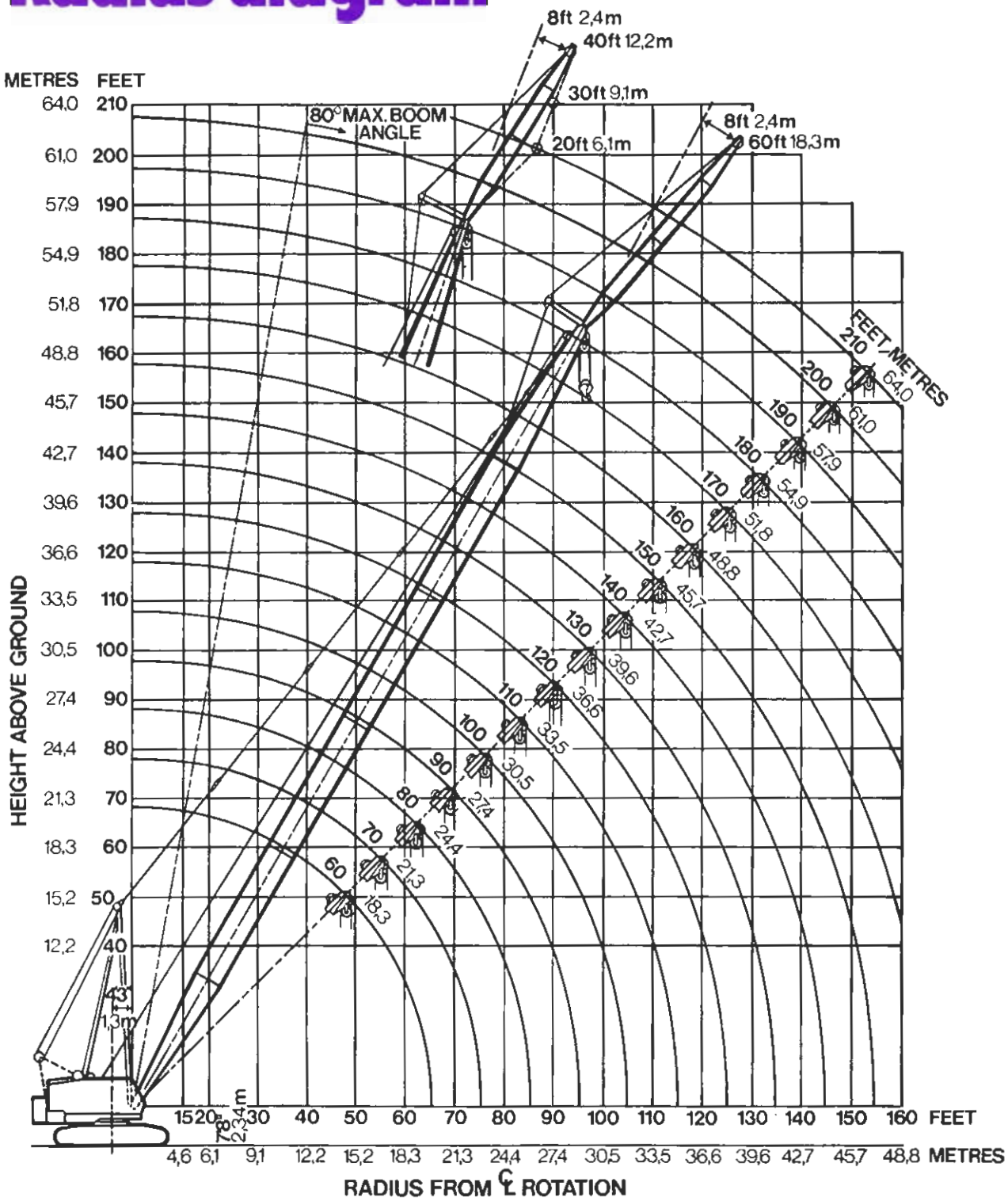

Maximum length of Main Boom is 64 m (*210ft*).

Maximum length of Main Boom with Fly Jib fitted is 57·9 m (*190ft*) with 6·09 m, 9·14 m and 12·19 m (*20ft, 30ft* and *40ft*) Fly Jib, and 54·8 m (*180ft*) with 18·3 m (*60ft*) Fly Jib.

Main Boom Loads: Chart loads are gross loads. Allowances must be made for the weight of suspended Hook Blocks, Slings, etc., when calculating nett working loads.

When a Fly Jib is fitted the weight of all suspended Hook Blocks, Slings, etc. must be deducted when calculating nett working loads. The Main Boom loads must be further reduced by the following loads when a Fly Jib is fitted:

6·1 m (*20ft*) Fly Jib reduce 840 kg (*1,850 lb*)
9·1 m (*30ft*) Fly Jib reduce 1 010 kg (*2,230 lb*)
12·2 m (*40ft*) Fly Jib reduce 1 180 kg (*2,610 lb*)
18·3 m (*60ft*) Fly Jib reduce 1 520 kg (*3,370 lb*)

Maximum Fly Jib loads:

6·1 m (*20ft*) Fly Jib — 13 208 kg (*13 tons*)
9·1 m (*30ft*) Fly Jib — 11 176 kg (*11 tons*)
12·2 m (*40ft*) Fly Jib — 9 144 kg (*9 tons*)
18·3 m (*60ft*) Fly Jib — 6 100 kg (*6 tons*)

Weight of all suspended Hook Blocks must be deducted when calculating nett working loads.

Fly Jib Offset: Regardless of Fly Jib length, the Offset must not exceed or be less than 2·44 m (*8ft*).

Weight of Hook Blocks:

110 000 kg (*108 ton*) — 2 000 kg (*4,430 lb*)
81 300 kg (*80 ton*) — 1 573 kg (*3,470 lb*)
55 880 kg (*55 ton*) — 880 kg (*1,950 lb*)
30 480 kg (*30 ton*) — 680 kg (*1,500 lb*)
20 320 kg (*20 ton*) — 540 kg (*1,200 lb*)
13 208 kg (*13 ton*) — 223 kg (*470 lb*)

Users are referred to British Standards Code of Practice (CP.3010:1972) "Safe Use of Cranes" which gives guidance for the safe application and operation of mobile cranes.

The Gross Working Loads listed on the duty tables are to be used under the following conditions:

BS.1757:1964 Ratings
These comply with the stability requirements of clause 11 of British Standard BS.1757:1964 but in certain instances are further governed by machine strength. They are to be used for all U.K. operation.

75% U.S.A. Ratings
Rated loads do not exceed 75% of the tipping loads but in certain instances are further governed by machine strength.
They are generally in accordance with U.S.A. Standard B30.5:1968.

The ratings are based on freely suspended loads and with the machine on firm level ground. No allowance has been made for wind effects on loads. Loads shown are gross and the weight of hook blocks, slings, etc., must be deducted to determine nett working loads.

NCK-RAPIER Eiger C110 Crawler Crane

MAIN BOOM

METRIC

Length of Boom metres	Load Radius metres	Angle of Boom degrees	GROSS WORKING LOAD BSS 1757: 1964 Rating kg	GROSS WORKING LOAD 75% U.S.A. Rating kg
18·3	4·3	81	109 735	109 735
	5·0	80	91 200	92 725
	6·0	76	75 345	75 345
	7·0	73	68 145	68 145
	8·0	70	59 895	59 895
	9·0	66	52 835	52 835
	10	63	46 740	46 740
	12	55	35 565	35 565
	14	47	29 300	29 300
21·3	5·2	80	79 250	86 365
	6	78	73 805	76 085
	7	75	63 500	67 590
	8	73	59 030	59 795
	9	70	51 545	51 615
	10	67	46 495	46 495
	12	61	35 365	35 365
	14	54	29 065	29 095
	16	47	24 205	24 205
	18	39	20 810	20 810
24·4	5·8	80	71 120	78 235
	6	80	69 465	75 795
	7	77	62 182	66 780
	8	75	58 665	58 665
	9	73	52 350	52 350
	10	70	47 570	47 570
	12	65	35 165	35 165
	14	59	28 895	28 895
	16	54	23 015	23 015
	18	48	20 700	20 700
	20	41	18 145	18 145
27·4	6·4	79	60 960	71 125
	7	79	58 555	66 125
	8	77	55 475	58 535
	9	75	51 755	52 125
	10	72	46 090	47 370
	12	68	34 960	34 960
	14	63	28 715	28 715
	16	58	23 855	23 855
	18	53	20 500	20 500
	20	48	18 000	18 000
	22	42	14 135	14 135
	24	35	13 870	13 870
30·5	7	80	51 575	64 010
	8	78	50 370	55 790
	9	76	47 185	49 650
	10	74	44 000	44 890
	12	70	34 755	34 755
	14	66	28 540	28 540
	16	62	23 700	23 700
	18	58	20 335	20 335
	20	53	17 803	17 803
	22	48	13 980	13 980
	24	43	13 730	13 730
	26	37	12 395	12 395
	28	30	10 910	11 155
33·5	7·3	80	47 755	60 965
	8	79	45 815	55 385
	9	77	43 340	48 710
	10	76	42 000	44 045
	12	72	34 485	34 485
	14	68	28 355	28 355
	16	65	23 530	23 530
	18	61	20 165	20 165
	20	57	17 635	17 635
	22	53	13 810	13 810
	24	48	12 555	13 555
	26	43	12 025	12 220
	28	38	10 595	11 050
	30	31	9 260	10 005
36·6	7·9	80	42 675	55 885
	8	80	42 170	53 505
	9	78	40 845	47 560
	10	77	39 505	42 580
	12	74	33 995	34 040
	14	70	28 170	28 170
	16	67	23 355	23 355
	18	64	19 990	19 990
	20	60	17 460	17 460
	22	56	13 665	13 665
	24	53	13 405	13 405
	26	48	11 760	12 060
	28	44	10 270	10 880
	30	39	9 035	9 840
	32	34	8 055	8 935
	34	27	7 150	8 045

Length of Boom metres	Load Radius metres	Angle of Boom degrees	GROSS WORKING LOAD BSS 1757: 1964 Rating kg	GROSS WORKING LOAD 75% U.S.A. Rating kg
39·6	8·5	80	35 560	50 805
	9	79	35 285	46 835
	10	78	34 945	42 375
	12	75	33 235	33 750
	14	72	27 960	27 955
	16	69	23 190	23 190
	18	65	19 790	19 790
	20	62	17 285	17 285
	22	59	15 047	15 047
	24	56	13 250	13 250
	26	52	11 610	11 880
	28	48	10 085	10 675
	30	44	8 755	9 630
	32	40	7 825	8 800
	34	35	7 090	7 975
	36	29	6 555	7 375
42·7	9·1	80	32 005	46 740
	10	79	31 720	42 170
	12	76	31 053	33 190
	14	73	27 050	27 680
	16	70	23 050	23 050
	18	67	19 690	19 690
	20	64	17 155	17 155
	22	61	13 350	13 350
	24	58	13 100	13 100
	26	55	11 480	11 725
	28	52	9 965	10 520
	30	48	8 565	9 465
	32	45	7 650	8 575
	34	40	6 935	7 795
	36	36	6 400	7 190
	38	31	5 890	6 625
	40	25	5 390	5 890
45·7	9·4	80	28 855	45 265
	10	79	28 685	41 955
	12	77	28 195	32 955
	14	74	25 795	27 465
	16	71	22 900	22 900
	18	69	19 535	19 535
	20	66	17 005	17 005
	22	63	13 195	13 195
	24	61	12 945	12 945
	26	58	11 305	11 575
	28	55	9 780	10 385
	30	51	8 450	9 385
	32	48	7 620	8 460
	34	45	6 785	7 630
	36	41	6 250	7 030
	38	37	5 715	6 430
	40	32	5 205	5 860
	42	27	4 805	5 410
48·8	10	80	26 215	40 640
	12	78	25 945	32 815
	14	75	24 825	27 345
	16	73	22 785	22 785
	18	70	19 385	19 385
	20	68	16 850	16 850
	22	65	13 045	13 045
	24	62	12 795	12 795
	26	60	11 180	11 460
	28	57	9 680	10 280
	30	54	8 345	9 200
	32	51	7 395	8 265
	34	48	6 625	7 445
	36	45	6 055	6 825
	38	42	5 560	6 265
	40	38	5 110	5 755
	42	34	4 745	5 340
	44	29	4 425	4 980
	46	24	4 125	4 565
51·8	10·7	80	23 675	37 595
	12	78	23 405	32 665
	14	76	23 065	27 220
	16	74	21 835	22 670
	18	71	19 135	19 240
	20	69	16 700	16 700
	22	67	14 445	14 445
	24	64	12 790	12 790
	26	62	11 015	11 335
	28	59	9 495	10 165
	30	57	8 230	9 105
	32	54	7 265	8 140
	34	51	6 485	7 295
	36	48	5 985	6 735
	38	45	5 510	6 205
	40	42	5 060	5 700
	42	39	4 620	5 265
	44	35	4 315	4 835
	46	31	3 965	4 420
	48	26	3 625	4 165

Lifting capacities

Delden CSE Ltd. 111 Station Road, Selston, Notts. NG16 6FF England
Tel: +44 (0)1773 810432 Fax: +44 (0)1773 580483 Email: info@delden-cse.com Website: www.delden-cse.com

NCK-RAPIER Eiger C110 Crawler Crane

MAIN BOOM — METRIC

Length of Boom metres	Load Radius metres	Angle of Boom degrees	GROSS WORKING LOAD BSS 1757: 1964 Rating kg	GROSS WORKING LOAD 75% U.S.A. Rating kg
54·9	11	80	21 745	36 070
	12	79	21 565	32 485
	14	77	21 240	27 070
	16	75	20 425	22 520
	18	73	18 825	19 090
	20	70	16 575	16 575
	22	68	14 335	14 335
	24	66	12 540	12 540
	26	64	10 845	11 180
	28	61	9 295	9 985
	30	59	8 025	8 945
	32	56	7 090	7 990
	34	54	6 325	7 120
	36	51	5 790	6 520
	38	48	5 285	5 945
	40	46	4 800	5 400
	42	43	4 400	4 955
	44	39	4 045	4 560
	46	36	3 710	4 180
	48	32	3 340	3 765
	50	28	3 100	3 595
	52	22	2 930	3 425
57·9	12·2	79	19 810	31 140
	14	77	19 570	26 710
	16	75	19 160	22 360
	18	73	18 515	18 915
	20	71	16 405	16 405
	22	69	14 170	14 170
	24	67	12 360	12 360
	26	65	10 650	10 957
	28	63	9 070	9 760
	30	60	7 740	8 705
	32	58	6 860	7 770
	34	56	6 155	6 960
	36	53	5 555	6 445
	38	51	5 050	5 815
	40	48	4 600	5 175
	42	46	4 200	4 725
	44	43	3 840	4 325
	46	40	3 510	3 950
	48	36	3 175	3 575
	50	33	2 925	3 300
	52	29	2 725	3 025

Length of Boom metres	Load Radius metres	Angle of Boom degrees	GROSS WORKING LOAD BSS 1757: 1964 Rating kg	GROSS WORKING LOAD 75% U.S.A. Rating kg
61·0	12·2	80	18 290	30 990
	14	78	18 050	26 565
	16	76	17 780	22 250
	18	74	17 515	18 920
	20	72	15 860	16 320
	22	70	14 000	14 000
	24	68	12 205	12 205
	26	66	10 500	10 795
	28	64	8 930	9 540
	30	62	7 625	8 435
	32	60	6 710	7 515
	34	58	5 960	6 705
	36	56	5 370	6 050
	38	53	4 835	5 450
	40	51	4 340	4 245
	42	48	3 910	4 400
	44	46	3 610	4 060
	46	43	3 360	3 780
	48	40	3 060	3 440
	50	37	2 800	3 150
	52	34	2 570	2 960
64·0	15·2	78	16 560	23 370
	16	77	16 435	22 100
	18	75	16 100	18 765
	20	73	15 140	16 155
	22	71	13 830	13 830
	24	69	12 035	12 035
	26	68	10 335	10 660
	28	66	8 765	9 420
	30	64	7 430	8 275
	32	62	6 505	7 310
	34	60	5 905	6 465
	36	57	5 185	5 785
	38	55	4 630	5 205
	40	53	4 165	4 690
	42	51	3 785	4 265
	44	48	3 435	3 900
	46	46	3 165	3 565
	48	43	2 835	3 200
	50	41	2 540	3 040
	52	38	2 260	2 880

FLY JIB DUTIES — METRIC

Main Boom + 6·1 m Fly Jib — 9·1 m and 12·2 m Fly Jib duties must not exceed maximum capacities shown on page 11.

Length of Boom metres	Load Radius metres	GROSS WORKING LOAD BSS 1757: 1964 Rating kg	GROSS WORKING LOAD 75% Rating kg
39·6 + Fly Jib	14	13 210	13 210
	16	13 210	13 210
	18	13 210	13 210
	20	13 210	13 210
	22	12 270	12 270
	24	9 470	9 470
	26	8 790	8 790
	28	8 670	8 670
	30	8 470	8 470
	32	7 650	8 160
	34	6 800	7 740
	36	6 320	7 200
42·7 + Fly Jib	14	13 210	13 210
	16	13 210	13 210
	18	13 210	13 210
	20	13 210	13 210
	22	12 250	12 250
	24	9 530	9 530
	26	8 900	8 900
	28	8 670	8 670
	30	8 340	8 340
	32	7 620	8 050
	34	6 690	7 600
	36	6 180	6 980
	38	5 780	6 460
	40	5 440	6 120

Length of Boom metres	Load Radius metres	GROSS WORKING LOAD BSS 1757: 1964 Rating kg	GROSS WORKING LOAD 75% Rating kg
45·7 + Fly Jib	14	13 210	13 210
	16	13 210	13 210
	18	13 210	13 210
	20	13 210	13 210
	22	12 250	12 250
	24	9 530	9 530
	26	8 950	8 950
	28	8 700	8 840
	30	8 250	8 500
	32	7 510	8 360
	34	6 690	7 540
	36	6 120	6 920
	38	5 720	6 350
	40	5 220	5 840
	42	4 820	5 420
48·8 + Fly Jib	15	13 210	13 210
	16	13 210	13 210
	18	13 210	13 210
	20	13 210	13 210
	22	13 040	13 040
	24	12 470	12 470
	26	10 260	10 260
	28	8 790	8 980
	30	8 220	8 400
	32	7 370	8 160
	34	6 580	7 370
	36	6 040	6 770
	38	5 560	6 210
	40	5 100	5 720
	42	4 700	5 270
	44	4 360	4 960
	46	4 080	4 680

Lifting capacities

NCK-RAPIER Eiger C110 Crawler Crane

FLY JIB DUTIES

Main Boom + 6·1 m Fly Jib

9·1 m and 12·2 m Fly Jib duties must not exceed maximum capacities shown on page 11.

METRIC

Length of Boom metres	Load Radius metres	GROSS WORKING LOAD BSS 1757: 1964 Rating kg	GROSS WORKING LOAD 75% Rating kg
51·8 + Fly Jib	16	13 210	13 210
	18	13 210	13 210
	20	13 210	13 210
	22	13 010	13 010
	24	12 380	12 380
	26	9 870	9 870
	28	8 700	8 960
	30	7 990	8 930
	32	7 320	8 080
	34	6 410	7 260
	36	5 950	6 690
	38	5 500	6 240
	40	5 040	5 720
	42	4 650	5 220
	44	4 280	4 840
	46	3 970	4 450
	48	3 680	4 080
54·9 + Fly Jib	16	13 210	13 210
	18	13 210	13 210
	20	13 210	13 210
	22	12 980	12 980
	24	12 300	12 300
	26	10 090	10 090
	28	8 760	8 960
	30	7 940	8 730
	32	7 000	7 910
	34	6 240	7 080
	36	5 720	6 540

Length of Boom metres	Load Radius metres	GROSS WORKING LOAD BSS 1757: 1964 Rating kg	GROSS WORKING LOAD 75% Rating kg
54·9 + Fly Jib	38	5 240	6 010
	40	4 760	5 410
	42	4 360	4 930
	44	4 050	4 536
	46	3 720	4 200
	48	3 310	3 740
	50	3 040	3 460
	52	2 950	3 320
57·9 + Fly Jib	16	13 210	13 210
	18	13 210	13 210
	20	13 210	13 210
	22	12 900	12 930
	24	11 930	12 270
	26	10 230	10 300
	28	8 790	9 010
	30	7 710	8 530
	32	6 800	7 650
	34	6 090	6 830
	36	5 560	6 240
	38	5 080	5 700
	40	4 560	5 180
	42	4 160	4 680
	44	3 820	4 280
	46	3 510	3 970
	48	3 200	3 540
	50	2 920	3 230
	52	2 690	3 090

Main Boom + 18·3 m Fly Jib

METRIC

Length of Boom metres	Load Radius metres	GROSS WORKING LOAD BSS 1757: 1964 Rating kg	GROSS WORKING LOAD 75% Rating kg
39·6 + 18·3 Fly Jib	15	6 100	6 100
	16	6 100	6 100
	18	6 100	6 100
	20	6 100	6 100
	22	6 060	6 060
	24	5 990	5 990
	26	5 950	5 950
	28	5 840	5 840
	30	5 560	5 560
	32	5 240	5 240
	34	5 040	5 040
	36	4 930	4 930
42·7 + 18·3 Fly Jib	15	6 100	6 100
	16	6 100	6 100
	18	6 100	6 100
	20	6 100	6 100
	22	6 070	6 070
	24	6 010	6 010
	26	5 950	5 950
	28	5 840	5 840
	30	5 650	5 650
	32	5 380	5 380
	34	5 130	5 130
	36	4 930	4 930
	38	4 740	4 740
	40	4 620	4 620
45·7 + 18·3 Fly Jib	15	6 100	6 100
	16	6 100	6 100
	18	6 100	6 100
	20	6 100	6 100
	22	6 100	6 100
	24	6 100	6 100
	26	6 060	6 060
	28	5 920	5 920
	30	5 710	5 710
	32	5 520	5 520
	34	5 320	5 320
	36	5 040	5 040
	38	4 840	4 840
	40	4 710	4 710
	42	4 560	4 560

Length of Boom metres	Load Radius metres	GROSS WORKING LOAD BSS 1757: 1964 Rating kg	GROSS WORKING LOAD 75% Rating kg
48·8 + 18·3 Fly Jib	18	6 100	6 100
	20	6 100	6 100
	22	6 100	6 100
	24	6 100	6 100
	26	6 040	6 040
	28	5 980	5 980
	30	5 920	5 920
	32	5 720	5 720
	34	5 410	5 410
	36	5 220	5 220
	38	5 040	5 040
	40	4 840	4 850
	42	4 680	4 790
	44	4 450	4 730
	46	4 110	4 680
51·8 + 18·3 Fly Jib	18	6 100	6 100
	20	6 100	6 100
	22	6 100	6 100
	24	6 100	6 100
	26	6 060	6 060
	28	5 980	5 980
	30	5 920	5 920
	32	5 760	5 760
	34	5 610	5 610
	36	5 470	5 470
	38	5 300	5 320
	40	5 050	5 260
	42	4 680	5 160
	44	4 330	4 880
	46	4 000	4 450
	48	3 630	4 050
54·9 + 18·3 Fly Jib	18	6 100	6 100
	20	6 100	6 100
	22	6 100	6 100
	24	6 100	6 100
	26	6 040	6 040
	28	5 960	5 960
	30	5 910	5 910
	32	5 840	5 840
	34	5 780	5 780
	36	5 640	5 640
	38	5 300	5 530
	40	4 810	5 380
	42	4 360	4 930
	44	4 030	4 560
	46	3 710	4 200
	48	3 330	3 770
	50	3 060	3 460
	52	2 950	3 320

Lifting capacities

NCK-RAPIER Eiger C110 Crawler Crane

MAIN BOOM — IMPERIAL

Length of Boom feet	Load Radius feet	Angle of Boom degrees	GROSS WORKING LOAD BSS 1757: 1964 Rating tons (2,240 lb)	BSS 1757: 1964 Rating lb	75% U.S.A. Rating tons (2,240 lb)	75% U.S.A. Rating lb
60	14	82	108·0	241,920	108·0	241,920
	15	80	95·5	213,920	97·0	217,280
	20	76	75·0	168,000	75·0	168,000
	25	71	61·6	137,984	61·6	137,984
	30	65	51·0	114,240	51·0	114·240
	35	60	42·0	94,080	42·0	94,080
	40	54	34·0	76,160	34·0	76,160
	50	41	25·3	56,672	25·3	56,672
70	17	80	78·0	174,720	85·0	190,400
	20	78	72·0	161,280	73·7	165,088
	25	74	60·5	135,520	61·5	137,760
	30	69	50·8	113,792	50·8	113,792
	35	65	41·8	93,632	41·8	93,632
	40	60	33·8	75,712	33·8	75,712
	50	50	25·1	56,224	25·1	56,224
	60	38	20·0	44,800	20·0	44,800
80	19	80	70·0	156 800	77·0	172,480
	20	79	67·6	151,424	73·5	164,640
	25	76	56·8	127,232	60·9	136,416
	30	72	50·6	113,344	50·6	113·344
	35	68	41·6	93,184	41·6	93,184
	40	64	33·6	75,264	33·6	75,264
	50	56	24·9	55,776	24·9	55,776
	60	47	19·9	44,576	19·9	44,576
	70	36	16·2	36,288	16·2	36,288
90	21	80	60·0	134,400	70·0	156,800
	25	77	56·0	125,440	60·0	134,400
	30	74	50·4	112,896	50·4	112,896
	35	71	41·4	92,736	41·4	92,736
	40	67	33·4	74,816	33·4	74,816
	50	60	24·74	55,418	24·74	55,418
	60	52	19·7	44,128	19·7	44,128
	70	44	16·1	36,064	16·1	36,064
	80	33	13·3	29,792	13·3	29,792
100	23	80	50·76	113,702	63·0	141,120
	25	79	50·76	113,702	57·2	128,128
	30	76	45·98	102,995	48·0	107,520
	35	73	41·20	92,288	41·2	92,288
	40	70	33·20	74,368	33·2	74,368
	50	63	24·59	55,081	24·59	55,081
	60	57	19·54	43,769	19·54	43,769
	70	49	15·89	35,594	15·89	35,594
	80	41	13·17	29,501	13·17	29,501
	90	32	11·10	24,864	11·34	25,402
110	24	80	47·00	105,280	60·0	134,400
	25	79	45·98	102,995	57·0	127,680
	30	77	42·4	94,976	47·0	105,280
	35	74	40·5	90,720	40·5	90,720
	40	71	33·0	73,920	33·0	73,920
	50	66	24·42	54,701	24·42	54,701
	60	60	19·37	43,389	19·37	43,389
	70	54	15·72	35,213	15·72	35,213
	80	47	13·00	29,120	13·00	29,120
	90	39	10·80	24,192	11·17	25,021
	100	30	8·80	19,712	9·60	21,500
120	26	80	42·00	94,080	55·00	123,200
	30	78	40·00	89,600	46·40	103,936
	35	76	38·00	85,120	38·40	86,016
	40	73	32·80	73,472	32·80	73,472
	50	68	24·25	54,320	24·25	54,320
	60	63	19·20	43,008	19·20	43,008
	70	57	15·55	34,944	15·55	34,944
	80	51	12·85	28,784	12·85	28,784
	90	45	10·45	23,408	11·00	24,640
	100	38	8·60	19,264	9·44	21,150
	110	29	7·25	16,240	8·15	18,256
130	28	80	35·00	78,400	50·00	112,000
	30	79	34·70	77,728	46·20	103,488
	35	77	34·15	76,496	38·20	85,568
	40	75	32·50	72,800	32·50	72,800
	50	70	24·10	53,984	24·10	53,984
	60	65	19·00	42,560	19·00	42,560
	70	60	15·40	34,496	15·40	34,496
	80	55	12·70	28,448	12·70	28,448
	90	49	10·30	23,072	10·80	24,192
	100	43	8·30	18,592	9·23	20,680
	110	36	7·10	15,904	7·99	17,897
	120	28	6·30	14,112	7·09	15,881

Length of Boom feet	Load Radius feet	Angle of Boom degrees	GROSS WORKING LOAD BSS 1757: 1964 Rating tons (2,240 lb)	BSS 1757: 1964 Rating lb	75% U.S.A. Rating tons (2,240 lb)	75% U.S.A. Rating lb
140	30	80	31·50	70,560	46·00	103,040
	35	78	31·00	69,440	38·00	85,120
	40	76	30·50	68,320	31·90	71,456
	50	71	23·95	53,648	23·95	53,648
	60	67	18·90	42,336	18·90	42,336
	70	62	15·25	34,160	15·25	34,160
	80	58	12·55	28,112	12·55	28,112
	90	53	10·20	22,848	10·65	23,860
	100	47	8·10	18,144	9·07	20,320
	110	41	6·95	15,568	7·81	17,494
	120	35	6·15	13,776	6·91	15,478
	130	27	5·40	12,096	6·08	13,620
150	31	80	28·40	63,616	44·55	99,792
	35	78	28·10	62,944	37·20	83,328
	40	76	27·70	62,048	31·75	71,120
	50	72	23·80	53,312	23·80	53,312
	60	68	18·75	42,000	18·75	42,000
	70	64	15·10	33,824	15·10	33,824
	80	60	12·40	27,776	12·40	27,776
	90	55	10·00	22,400	10·50	23,520
	100	50	8·00	17,920	9·00	20,160
	110	45	6·80	15,232	7·65	17,136
	120	40	6·00	13,440	6·75	15·120
	130	34	5·20	11,648	5·85	13 104
	140	25	4·60	10,304	5·18	11,600
160	33	80	25·90	58,016	40·00	89,600
	35	79	25·80	57,792	37·15	83,216
	40	77	25·50	57,120	31·60	70,784
	50	74	23·70	53,088	23·70	53,088
	60	70	18·60	41,664	18·60	41,664
	70	66	14·95	33,488	14·95	33,488
	80	62	12·25	27,440	12·25	27,448
	90	58	9·90	22,176	10·42	23,340
	100	54	7·90	17,696	8·80	19,700
	110	49	6·65	14,896	7·47	16,733
	120	44	5·80	12,992	6·54	14,650
	130	39	5·10	11,424	5·74	12,860
	140	32	4·55	10,192	5·12	11,470
	150	24	4·10	9,184	4·62	10,350
170	35	80	23·30	52,192	37·00	82,880
	40	78	23·00	51,520	31·45	70,448
	50	75	22·50	50,400	23·60	52,864
	60	71	18·45	41,328	18·45	41,328
	70	67	14·80	33,152	14·80	33,152
	80	64	12·12	27,149	12·12	27,149
	90	60	9·70	21,728	10·30	23,070
	100	56	7·80	17,472	8·71	19,500
	110	52	6·50	14,560	7·31	16,370
	120	48	5·75	12,880	6·47	14,500
	130	43	5·05	11,312	5·69	12,750
	140	37	4·48	10,035	5·04	11,290
	150	31	3·95	8,848	4·40	9,950
	160	23	3·44	7,706	3·88	8,690
180	36	80	21·40	47,936	35·50	79,520
	40	79	21·20	47,488	31·30	70,112
	50	75	20·70	46,368	23·45	52,528
	60	72	18·30	40,992	18·30	40,992
	70	69	14·70	32,928	14·70	32,928
	80	65	12·00	26,880	12·00	26,880
	90	62	9·50	21,280	10·12	22,670
	100	58	7·60	17,024	8·56	19,170
	110	54	6·35	14,336	7·15	16,016
	120	50	5·55	12,432	6·25	14,000
	130	46	4·80	10,752	5·40	12,100
	140	41	4·20	9,408	4·73	10,600
	150	36	3·70	8,288	4·17	9,340
	160	30	3·15	7,325	3·55	7,950
	170	22	2·90	6,496	3·27	7,320
190	40	79	19·50	43,680	30·65	68,656
	50	76	19·10	42,784	23·30	52,192
	60	73	18·13	40,611	18·13	40,611
	70	70	14·54	32,570	14·54	32,570
	80	67	11·82	26,477	11·82	26,477
	90	63	9·30	20,832	9·90	22,180
	100	60	7·30	16,352	8·32	18,640
	110	56	6·20	13,888	6·97	15,613
	120	53	5·30	11,872	6·20	13,500
	130	49	4·60	10,304	5·18	11,600
	140	44	4·00	8,960	4·50	10,080
	150	40	3·50	7,840	3·94	8,830
	160	35	3·00	6,720	3·38	7,570
	170	29	2·70	6,048	3·04	6,810

Lifting capacities

NCK-RAPIER Eiger C110 Crawler Crane

MAIN BOOM

IMPERIAL

Length of Boom feet	Load Radius feet	Angle of Boom degrees	GROSS WORKING LOAD BSS 1757: 1964 Rating tons (2,240 lb)	BSS 1757: 1964 Rating lb	75% U.S.A. Rating tons (2,240 lb)	75% U.S.A. Rating lb
200	40	80	18·00	40,320	30·50	68,320
	50	77	17·60	39,424	23·15	51,856
	60	74	17·20	38,528	18·15	40,656
	70	71	14·37	32,189	14·37	32,189
	80	68	11·67	26,141	11·67	26,141
	90	65	9·15	20,496	9·70	21,728
	100	62	7·20	16,128	8·04	18,010
	110	58	6·00	13,440	6·75	15,120
	120	55	5·12	11,469	5·77	12,930
	130	51	4·35	9,744	4·90	10,980
	140	47	3·71	8,310	4·17	9,340
	150	43	3·35	7,504	3·77	8,440
	160	39	2·90	6,496	3·26	7,300
	170	34	2·55	5,712	2·87	6,430

Length of Boom feet	Load Radius feet	Angle of Boom degrees	GROSS WORKING LOAD BSS 1757: 1964 Rating tons (2,240 lb)	BSS 1757: 1964 Rating lb	75% U.S.A. Rating tons (2,240 lb)	75% U.S.A. Rating lb
210	50	78	16·3	36,512	23·00	51,520
	60	75	15·8	35,392	18·00	40,320
	70	72	14·2	31,808	14·20	31,808
	80	69	11·5	25,760	11·50	25,760
	90	66	9·0	20,160	9·60	21,504
	100	63	7·0	15,680	7·87	17,629
	110	60	5·98	13,395	6·52	14,605
	120	57	4·9	10,976	5·50	12,320
	130	53	4·17	9,341	4·696	10,520
	140	50	3·6	8,064	4·06	9,100
	150	46	3·16	7,078	3·56	7,970
	160	42	2·67	5,981	3·01	6,740
	170	38	2·25	5,040	2·53	5,670

FLY JIB DUTIES

Main Boom + 20 ft Fly Jib — 30 ft and 40 ft Fly Jib duties must not exceed maximum capacities shown on page 11.

IMPERIAL

Length of Boom feet	Load Radius feet	GROSS WORKING LOAD BSS 1757: 1964 Rating tons	BSS 1757: 1964 Rating lb	75% Rating kg	75% Rating lb
130 + Fly Jib	45	13·00	29,120	13 210	29,120
	50	13·00	29,120	13 210	29,120
	60	13·00	29,120	13 210	29,120
	70	13·00	29,120	13 210	29,120
	80	8·80	19,800	8 981	19,800
	90	8·60	19,260	8 736	19,260
	100	8·30	18,590	8 432	18,590
	110	6·90	15,460	7 883	17,380
	120	6·15	13,780	7 031	15,500
140 + Fly Jib	45	13·00	29,120	13 210	29,120
	50	13·00	29,120	13 210	29 120
	60	13·00	29,120	13 210	29 120
	70	13·00	29,120	13 210	29,120
	80	8·80	19,800	8 981	19,800
	90	8·60	19,260	8 736	19,260
	100	8·10	18,140	8 228	18,140
	110	6·80	15,230	7 784	17,160
	120	6·00	13,440	6 867	15,140
	130	5·40	12,100	6 178	13,620
150 + Fly Jib	50	13·00	29,120	13 210	29,120
	60	13·00	29,120	13 210	29,120
	70	13·00	29,120	13 210	29,120
	80	8·90	19,930	9 040	19,930
	90	8·70	19,490	8 840	19,490
	100	8·00	17,920	8 128	17,920
	110	6·70	15,010	7 661	16,890
	120	5·90	13,220	6 745	14,870
	130	5·20	11,650	5 942	13 100
	140	4·60	10,300	5 262	11,600
160 + Fly Jib	50	13·00	29,120	13 210	29,120
	60	13·00	29,120	13 210	29,120
	70	13·00	29,120	13 210	29,120
	80	12·20	27,330	12,397	27,330
	90	8·80	19,800	8 981	19,800
	100	7·90	17,700	8 119	17,900
	110	6·60	14,780	7 548	16,640
	120	5·80	13,000	6 645	14,650
	130	5·10	11,420	5 833	12,860
	140	4·55	10,190	5 203	11,470
	150	4·10	9,180	4 695	10,350

Length of Boom feet	Load Radius feet	GROSS WORKING LOAD BSS 1757: 1964 Rating tons	BSS 1757: 1964 Rating lb	75% Rating kg	75% Rating lb
170 + Fly Jib	55	13·00	29,120	13 210	29,120
	60	13·00	29,120	13 210	29,120
	70	13·00	29,120	13 210	29,120
	80	12·10	27,100	12 292	27,100
	90	8·80	19,800	8 981	19,800
	100	7·80	17,470	8 931	19,690
	110	6·50	14,560	7 425	16,370
	120	5·75	12,880	6 586	14,520
	130	5·05	11,310	5 783	12,750
	140	4·48	10,040	5 121	11,290
	150	3·95	8,850	4 513	9,950
	160	3·44	7,700	3 942	8,690
180 + Fly Jib	55	13·00	29,120	13 210	29,120
	60	13·00	29,120	13 210	29,120
	70	13·00	29,120	13 210	29,120
	80	12·00	26,880	12 193	26,880
	90	8·90	19,930	9 040	19,930
	100	7·60	17,020	8 695	19,170
	110	6·30	14,110	7 212	15,900
	120	5·55	12,430	6 450	14,220
	130	4·80	10,750	5 488	12,100
	140	4·20	9,400	4 808	10,600
	150	3·70	8,290	4 237	9,340
	160	3·15	7,060	3 606	7,950
	170	2·90	6,500	3 320	7,320
190 + Fly Jib	55	13·00	29,120	13 210	29,120
	60	13·00	29,120	13 210	29,120
	70	13·00	29,120	13 210	29,120
	80	11·60	25,980	11 884	26,200
	90	9·00	20,160	9 144	20,160
	100	7·40	16,580	8 455	18,640
	110	6·15	13,780	7 031	15,500
	120	5·35	12,000	6 123	13,500
	130	4·60	10,300	5 262	11,600
	140	4·00	8,960	4 572	10,080
	150	3·50	7,840	4 005	8,830
	160	3·00	6,720	3 434	7,570
	170	2·70	6,050	3 089	6,810

Lifting capacities

NCK-RAPIER Eiger C110 Crawler Crane

Main Boom + 60 ft Fly Jib

IMPERIAL

Length of Boom	Load Radius	GROSS WORKING LOAD			
		BSS 1757: 1964 Rating		75% Rating	
feet	feet	tons	lb	kg	lb
130 + 60 Fly Jib	50	6·00	13,440	6 100	13,440
	60	6·00	13,440	6 100	13,440
	70	6·00	13,440	6 100	13,440
	80	5·90	13,210	5 992	13,210
	90	5·80	13,000	5 897	13,000
	100	5·40	12,100	5 488	12,100
	110	5·00	11 200	5 080	11,200
	120	4·50	10,800	4 899	10,800
140 + 60 Fly Jib	50	6·00	13,440	6 100	13,440
	60	6·00	13,440	6 100	13,440
	70	6·00	13,440	6 100	13 440
	80	5·90	13,210	5 992	13,210
	90	5·80	13,000	5 897	13,000
	100	5·50	12,320	5 588	12,320
	110	5·10	11,420	5 180	11,420
	120	4·80	10,750	4 876	10,750
	130	4·56	10,210	4 631	10,210
150 + 60 Fly Jib	50	6·00	13,440	6 100	13,440
	60	6·00	13,440	6 100	13,440
	70	6·00	13,440	6 100	13,440
	80	6·00	13,440	6 100	13,440
	90	5·90	13,210	5 992	13,210
	100	5·60	12,480	5 661	12,480
	110	5·30	11,870	5 384	11,870
	120	4·90	10,980	4 980	10,980
	130	4·66	10,440	4 736	10,440
	140	4·45	9,970	4 522	9,970

Length of Boom	Load Radius	GROSS WORKING LOAD			
		BSS 1757: 1964 Rating		75% Rating	
feet	feet	tons	lb	kg	lb
160 + 60 Fly Jib	60	6·00	13,440	6 100	13,440
	70	6·00	13,440	6 100	13,440
	80	6·00	13,440	6 100	13,440
	90	5·90	13,210	5 992	13,210
	100	5·80	13,000	5 897	13,000
	110	5·40	12,100	5 488	12,100
	120	5·10	11,420	5 180	11,420
	130	4·80	10,750	4 876	10,750
	140	4·55	10,190	4 762	10,500
	150	4·10	9,180	4 695	10,350
170 + 60 Fly Jib	60	6·00	13,440	6 100	13,440
	70	6·00	13,440	6 100	13,440
	80	6·00	13,440	6 100	13,440
	90	5·90	13,210	5 992	13,210
	100	5·80	13,000	5 897	13,000
	110	5·60	12,480	5 661	12,480
	120	5·32	11,920	5 407	11,920
	130	5·05	11,310	5 262	11,600
	140	4·48	10,040	5 121	11,290
	150	3·95	8,850	4 513	9,950
	160	3·44	7,700	3 942	8,690
180 + 60 Fly Jib	60	6·00	13,440	6 100	13,440
	70	6·00	13,440	6 100	13,440
	80	6·00	13,440	6 100	13,440
	90	5·90	13,210	5 992	13,210
	100	5·80	13,000	5 897	13,000
	110	5·70	12,770	5 792	12,770
	120	5·50	12,320	5 588	12,320
	130	4·80	10,750	5 488	12,100
	140	4·20	9,400	4 808	10,600
	150	3·70	8,290	4 237	9,340
	160	3·15	7,060	3 606	7,950
	170	2·90	6,500	3 320	7,320

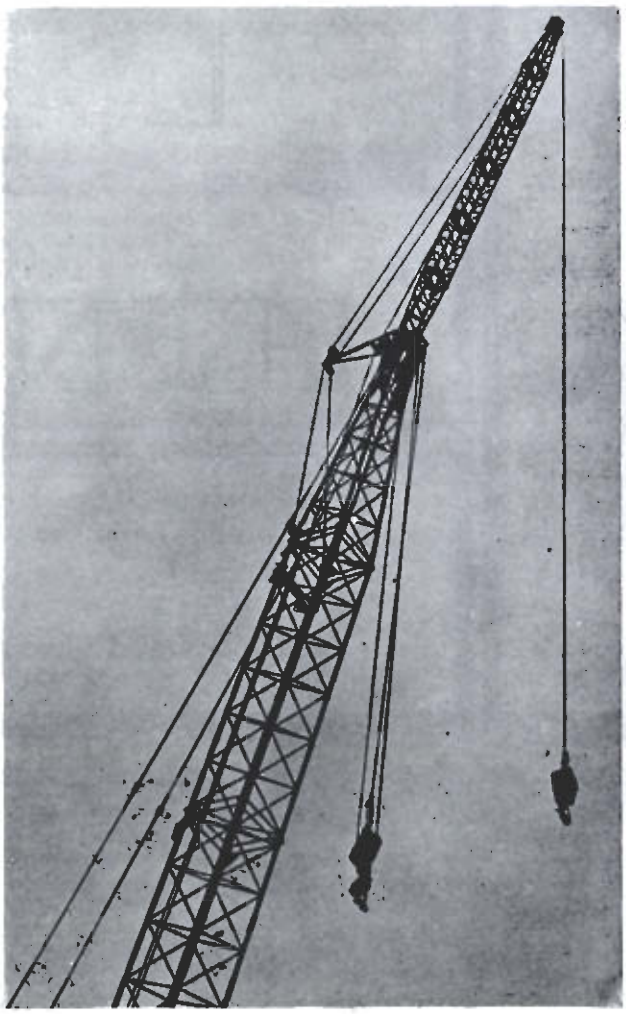

18·3 m (*60ft*) Fly Jib for fitting to Main Booms up to 54·9 m (*180ft*) long.

Maximum Fly Jib capacities

6·1 m (*20ft*) Fly Jib—13 208 kg (*13 tons*)
9·1 m (*30ft*) Fly Jib—11 176 kg (*11 tons*)
12·2 m (*40ft*) Fly Jib— 9 144 kg (*9 tons*)
18·3 m (*60ft*) Fly Jib— 6 100 kg (*6 tons*)

Crane radius diagram appears on page 5.

Lifting capacities

NCK-RAPIER Eiger C110 Crawler Crane

Major Component Weights

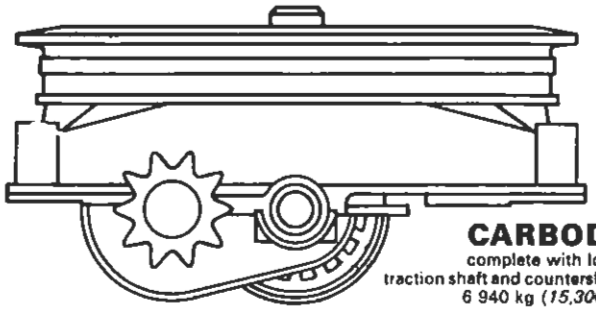

CARBODY
complete with lower traction shaft and countershafts
6 940 kg (*15,300 lb*)

CRAWLER AXLES
EACH 6 600 kg (*14,570 lb*)
PAIR 13 200 kg (*25,140 lb*)

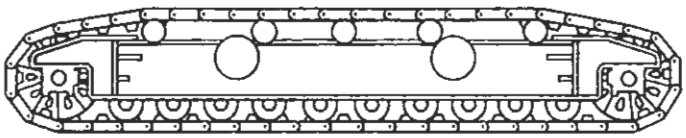

CRAWLER ASSEMBLIES

	EACH	PAIR
1·07 m (*42in*) Shoes:	12 700 kg (*28,000 lb*)	25 400 kg (*56,000 lb*)
1·22 m (*48in*) Shoes:	13 150 kg (*29,000 lb*)	26 300 kg (*58,000 lb*)

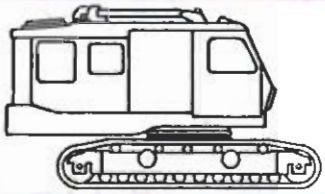

BASE MACHINE
No external counterweight
1,07 m (*42in*) Shoes: 70 470 kg (*155,360 lb*)
1·22 m (*48in*) Shoes: 71 380 kg (*157,360 lb*)

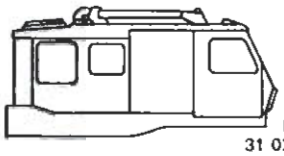

UPPER UNIT
No counterweight
31 025 kg (*68,400 lb*)

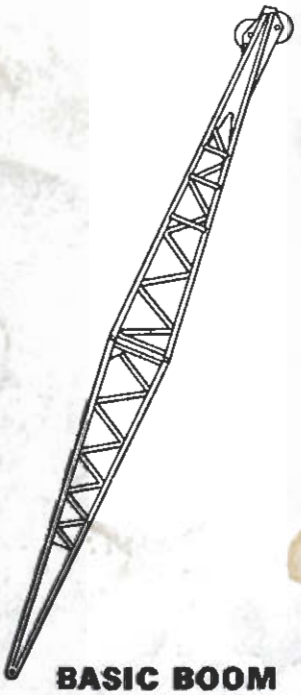

BASIC BOOM 18·3 m 60ft
4 220 kg (*9,300 lb*)

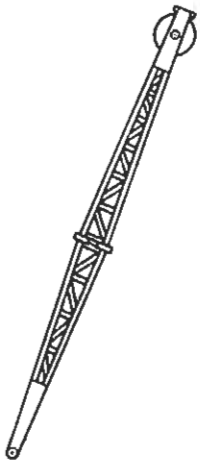

FLY JIBS
6·1 m (*20ft*); 810 kg (*1,350 lb*)
9·1 m (*30ft*); 770 kg (*1,700 lb*)
12·2 m (*40ft*); 930 kg (*2,050 lb*)
18·3 m (*60ft*); 1 250 kg (*2,750 lb*)

COUNTERWEIGHT
External: 30 500 kg (*67,200 lb*)

INSERTS
3·05 m (*10ft*) 490 kg (*1,073 lb*)
6·1 m (*20ft*) 810 kg (*1,790 lb*)
9·1 m (*30ft*) 1 140 kg (*2,504 lb*)

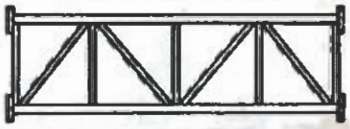

OTHER EQUIPMENT

Telescopic Boom Backstops	395 kg	*870 lb*
Mast	2 065 kg	*4,550 lb*
Rear "A" Frame	1 225 kg	*2,700 lb*
2 × Basic Pendants	250 kg	*545 lb*
2 × 3·05 m (*10ft*) pendants	180 kg	*400 lb*
2 × 6·1 m (*20ft*) pendants	240 kg	*530 lb*
2 × 9·1 m (*30ft*) pendants	260 kg	*580 lb*

In accordance with our established policy of constant improvement we reserve the right to amend these specifications at any time without notice.